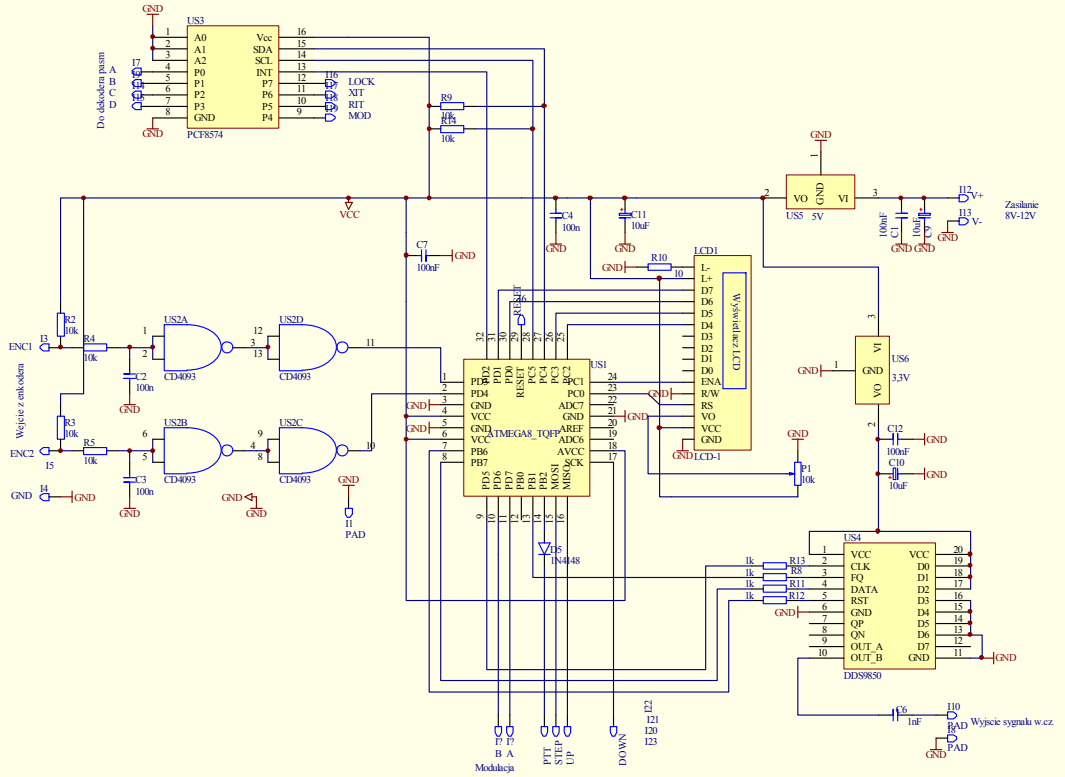

Title		
Size B	Number	Revision
Date: 27-Jan-2017		Sheet of
File: D:\PROTEL proj\DDS_V3.3.ddb		Drawn By: